International Journal of Science Engineering and Advance Technology

Improving Power Quality Of Distribution Grid Using An Ultracapacitor Integrated With Power Conditioner

P Naresh[1] ,V Sai Ganesh[2], B Vinay Varshini[3] ,K Nishitha[4] ,Ekram Quershi[4 5]
[1]Asst. Professor, Department of EEE, Raghu Engineering College, Vishakapatnam India[1]
B.Tech Student, Department of EEE,Raghu Engineering [2,3,4,5]College, Vishakapatnam India.[2]

A B S T R A C T
Entrance of different sorts of disseminated vitality assets (DERs) like sun oriented, wind, and module half and half electric vehicles (PHEVs) onto the dispersion lattice is on the ascent. There is a comparing increment in power quality issues and discontinuities on the circulation lattice. With a specific end goal to diminish the discontinuities and enhance the power nature of the conveyance framework, a ultracapacitor (UCAP) incorporated power conditioner is proposed in this paper. UCAP incorporation gives the power conditioner dynamic power capacity, which is valuable in handling the lattice irregularities and in enhancing the voltage hang and swell pay. UCAPs have low vitality thickness, high-control thickness, and quick charge/release rates, which are all perfect qualities for meeting high-control low-vitality occasions like sags/swells. In this paper, UCAP is coordinated into dc-connection of the power conditioner through a bidirectional dc–dc converter that aides in giving a hardened dc-interface voltage. The reconciliation helps in giving dynamic/responsive power bolster, irregularity smoothing, and list/swell pay. The aggregate consonant bending was lessened by utilizing fuzzy controller. Plan and control of both the dc–ac inverters and the dc–dc converter are talked about. The reproduction performed in MATLAB/SIMULINK condition.

Index terms—Active power channel (APF), dc–dc converter, d–q control, dynamic voltage restorer(DVR), vitality stockpiling combination, droop/swell, ultra capacitors(UCAP),fuzzy controller.

I. INTRODUCTION

Control quality is significant reason for worry in the business, and it is imperative to keep up great power qualityon the lattice. Thusly, there is reestablished enthusiasm for power quality items like the dynamic voltage restorer (DVR) and dynamic power channel (APF). DVR keeps delicate burdens from encountering voltage droops/swells and APF keeps the matrix from providing nonsinusoidal streams when the heap is nonlinear . The idea of coordinating the DVR and APF through a back–back inverter topology was initially presented in and the topology was named as brought together power quality conditioner (UPQC). The outline objective of the conventional UPQC was constrained to enhance the power nature of the appropriation framework by being ready to give droop, swell, and consonant current remuneration. In this paper, vitality stockpiling coordination into the power conditioner topology is being proposed, which will permit the coordinated framework to give extra usefulness. With the expansion in infiltration of the appropriation vitality assets (DERs) like wind, sunlight based, and module crossover electric vehicles (PHEVs), there is a comparing increment in the power quality issues and irregularities on the conveyance lattice in the seconds to minutes time scale . Vitality stockpiling combination with DERs is a potential arrangement, which will expand the unwavering quality of the DERs by lessening the irregularities and furthermore help in handling a portion of the power quality issues on the appropriation matrix . Applications where vitality stockpiling coordination will enhance the functionalityare being distinguished, and endeavors are being made to make vitality stockpiling combination economically feasible on an extensive scale . Smoothing of DERs is one application where vitality stockpiling reconciliation and ideal control assume an essential part . In super capacitor and stream battery cross breed vitality stockpiling framework are coordinated into the wind turbine generator to give wind control smoothing, and the framework is tried utilizing an ongoing test system. In super capacitor is utilized as a helper vitality stockpiling for photovoltaic (PV)/energy unit, and a model-based controller is created for giving ideal control. In a battery vitality stockpiling systembased control to relieve wind/PV variances is proposed. In multiobjective streamlining technique to incorporate battery stockpiling for enhancing PV reconciliation into the appropriation matrix is proposed. In a hypothetical investigation is performed to decide the upper and lower limits of the battery measure for network associated PV frameworks. In a govern based control is proposed to streamline the battery release while dispatching discontinuous inexhaustible assets. In ideal measuring of a zinc bromine-based vitality stockpiling framework

for lessening the discontinuities in wind power is proposed. It is clear from the writing that inexhaustible discontinuity smoothing is one application that requires dynamic power bolster from vitality stockpiling in the seconds to minutes time scale . Receptive power support is another application which is increasing wide acknowledgment with recommendations for responsive power evaluating. Voltage hang and swells are power quality issues on appropriation matrix that must be moderated. list/swell pay needs dynamic power bolster from the vitality stockpiling in the milliseconds to 1 min length . All the above functionalities can be acknowledged by incorporating vitality stockpiling into the network through a power conditioner topology. Of all the rechargeable vitality stockpiling advances superconducting magnet vitality stockpiling (SMES), flywheel vitality stockpiling framework (FESS), battery vitality stockpiling framework (BESS), and ultracapacitors (UCAPs), UCAPs are perfect for giving dynamic power support to occasions on the conveyance lattice which require dynamic power bolster in the

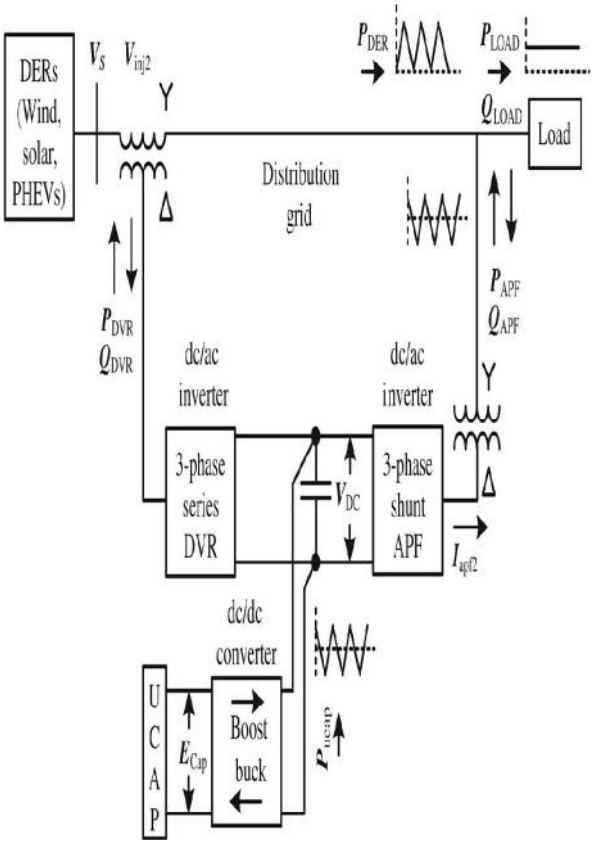

Fig. 1. One-line diagram of power conditioner with UCAP energy storage.

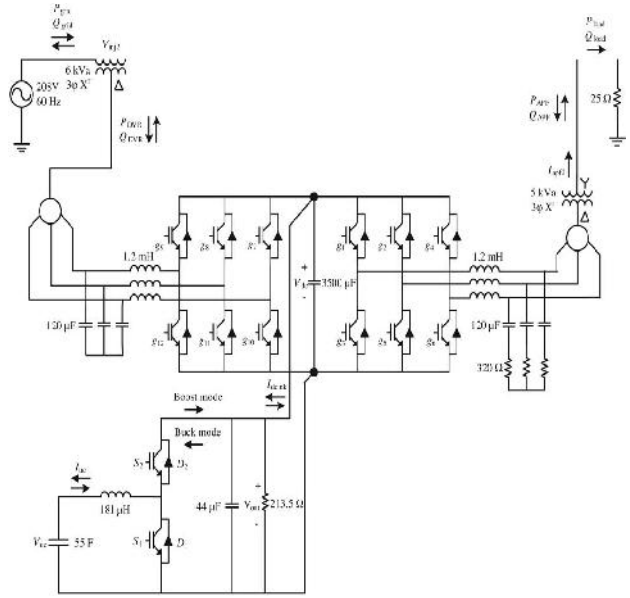

Fig. 2. Model of power conditioner with UCAP energy storage.

seconds to minutes time scale like voltage hangs/swells, dynamic/responsive power bolster, and sustainable discontinuity smoothing . In this paper, UCAP-based vitality stockpiling mix through a power conditioner into the circulation matrix is proposed, and the accompanying application ranges are tended to

1) Integration of the UCAP with power conditioner framework gives the framework dynamic power capacity.

2) Active power ability is vital for autonomously repaying voltage hangs/swells and to give dynamic/receptive power support and discontinuity smoothing to the network.

3) Simulation approval of the UCAP, dc–dc converter, inverter their interface, and control.

4) Development of inverter and dc–dc converter controls to give hang/swell remuneration and dynamic/receptive support to the dissemination network.

II. THREE-PHASE INVERTERS

A. Control Stage

The one-line graph of the framework is appeared in Fig. 1. The power organize comprises of two consecutive three-stage voltage

source inverters associated through a dc-interface capacitor. UCAP vitality stockpiling is associated with the dc-interface capacitor through

a bidirectional dc–dc converter. The arrangement inverter is in charge of remunerating the voltage lists and swells; and the shunt inverter is in charge of dynamic/responsive power bolster and sustainable discontinuity smoothing. The entire circuit outline of the arrangement DVR, shunt APF, and the bidirectional dc–dc converter is appeared in Fig. 2. Both the inverter frameworks comprise of IGBT module, its door driver, LC channel, and a segregation transformer. The dc-connect voltage Vdc is directed at 260 V for ideal voltage and current pay of the converter and the line–line voltage Vab is 208 V. The objective of this venture is to give the coordinated power conditioner and UCAP framework with dynamic power ability

1) to remunerate impermanent voltage droop (0.1–0.9 p.u.) and swell (1.1–1.2 p.u.), which last from 3 s to 1 min ; and 2) to give dynamic/receptive support and inexhaustible discontinuity smoothing, which is in the seconds to minutes time scale.

B. Controller Implementation

The arrangement inverter controller execution depends on the in-stage pay strategy that requires PLL for assessing θ, and this has been executed utilizing the invented control technique portrayed in [4]. In view of the evaluated θ and the line–line source, voltages Vab, Vbc, Vca (which are accessible for this delta-sourced framework) are changed into the d–q space and the line–neutral segments of the source voltage Vsa, Vsb, and Vsc which are not accessible can then be assessed utilizing

$$\begin{pmatrix} x_d \\ x_q \end{pmatrix} = \frac{2}{3}\begin{bmatrix} \cos\theta & \cos\left(\theta - \frac{2}{3}\pi\right) & \cos\left(\theta + \frac{2}{3}\pi\right) \\ -\sin\theta & -\sin\left(\theta - \frac{2}{3}\pi\right) & -\sin\left(\theta + \frac{2}{3}\pi\right) \end{bmatrix} * \begin{pmatrix} x_a \\ x_b \\ x_c \end{pmatrix}$$

These voltages are standardized to unit sine waves utilizing line–neutral framework voltage of 120 Vrms as reference and contrasted and unit sine waves in-stage with real framework voltages Vs from (2) to discover the infused voltage references Vref important to keep up a consistent voltage at the heap terminals, where m is the tweak list, which is 0.45 for this case. In this manner, at whatever point there is a voltage list or swell on the source side, a comparing voltage Vinj2 isinjected in-stage by the DVR and UCAP framework to nullify the impact and hold a steady voltage VL at the heap end. The real dynamic and responsive power provided by the arrangement inverter can be processed utilizing (3) from the rms estimations of infused voltage Vinj2a and load current ILa and ϕ is the stage distinction between the two waveforms.

The shunt inverter controller execution depends on the id − iq strategy, which is adjusted to give dynamic and receptive power pay, to such an extent that id controls the responsive power and iq controls the dynamic power. Along these lines, in light of the references for dynamic and receptive forces Pref and Qref , the reference streams iqref and idref in d–q area can be computed utilizing (4), where vsq is the framework voltage in q-space and the reference ebbs and flows are ascertained utilizing (5).

III.FUZZY LOGIC CONTROL

FLC dictated by the arrangement of phonetic guidelines. The scientific displaying is not required in fuzzy controller because of the change of numerical variable into etymological factors. FLC comprises of three section: a. Fuzzification, b. Obstruction motor, c. Defuzzification. The fuzzy controller is described as; For each info and yield there are seven fuzzy sets. For effortlessness a participation capacities is Triangular. Fuzzification is utilizing constant universe of talk. Suggestion is utilizing Mamdani's "min" administrator. Defuzzification is utilizing the "stature" strategy. FLC piece outline as appeared in figure 2.

a. Fuzzification

Enrollment work qualities are appointed to the phonetic factors, utilizing seven fuzzy subsets: NB(Negative Big), NM(Negative Medium), NS (Negative Small), ZE (Zero), PS (Positive Small),PM(Positive Medium) and PB (Positive Big). The parcel of fuzzy subsets and the state of enrollment capacity adjust the get down to business to proper framework. Input blunder E(k) and change in mistake CE(k) of qualities which is standardized by an info scaling element as appeared in table 1.
In this system the input scaling factor is between -1 and +1 has design. The triangular shape of the membership function of this arrangement presumes that for any particular input there is only one dominant fuzzy subset . The input error E(k) and change in error C(k) for the FLC is given as

b. Surmising Method

A few piece techniques, for example, Max-Min and Max-Dot have been proposed and Min strategy is utilized. Least administrator and Maximum administrator of yield participation capacity is of each control and it is appeared in Table 1.

c. Defuzzification

As a plant more often than not requires a non-fuzzy estimation of control, a defuzzification stage is required. To process the yield of the FLC, "stature" technique is utilized and the FLC yield changes the control yield.

Facilitate, the yield of FLC controls the switch in the inverter. Keeping in mind the end goal to control these parameters, they are detected and contrasted and the reference values. To accomplish this, the participation elements of Fuzzy controller are: mistake, change in blunder and yield as appeared in Figs.(3), (4). In the present work, for fuzzification, nonuniform fuzzifier has been utilized. In the event that the correct estimations of blunder and change in mistake are little or extensive, they are partitioned on the other hand.

The α is self-customizable element and to direct operation. E is the mistake of the framework, C is the adjustment in blunder and u is the control variable. On the off chance that the framework is not in adjusted it shows a blunder "E" if the esteem is extensive. While the blunder "E" esteem is little it demonstrates that the framework is close to adjusted state. In the event that framework is lopsided, the control factors ought to be extend to adjust the framework as right on time as could reasonably be expected. For framework solidness overshoot assumes a vital part. For limiting motions and framework dependability it requires less overshoot. "C" assumes an essential part, while the part of "E" is reduced. The streamlining is finished by α. The arrangement of Fuzzy controller tenets is given in Table 1.

IV.SIMULATION RESULTS

The larger amount incorporated controller is intended to settle on framework level choices on the inverter and dc–dc converter controllers. In light of different framework parameters like Pload, Qload, Pgrid, Qgrid, Vucap, Vdc, Idclnk, and Iucap, the larger amount incorporated controller will settle on working in one of the accompanying modes: dynamic power bolster mode, receptive control bolster mode, inexhaustible irregularity smoothing mode, droop/swell remuneration mode, and UCAP Charge mode. In dynamic power bolster mode and inexhaustible discontinuity smoothing mode, the UCAP-PC framework must give dynamic energy to the lattice. Along these lines, the dynamic power ability of the UCAP-PC framework must be surveyed by the larger amount coordinated controller. In light of the Pgrid and Pload values, the reference Pref is computed in the larger amount coordinated controller, and it will choose if the UCAP has enough vitality to react to the Pref charge in view of the UCAP condition of charge. On the off chance that the UCAP has enough ability to react to the demand, then the dc–dc converter controller is worked in lattice bolster mode; else, it is worked in control mode, where the UCAP is energized and the power demand is met at a later time. In matrix bolster mode, the dc–dc converter will work in a bidirectional manner in both Buck and Boost modes to react to the dynamic power asks for and manage the dc-connect voltage in a steady mold, while the inverter controller ought to react with the end goal that the summoned Pref is provided by the inverter through current control. In receptive power bolster mode, the UCAP-PC framework must give responsive energy to the matrix. In this mode, the UCAP-PC does not give any dynamic energy to the matrix and even the PC misfortunes are provided by the network. In light of the Qgrid and Qload values, the reference Qref is figured in the larger amount incorporated controller. In this mode, the dc–dc converter controller can be modified to work in framework bolster mode straightforwardly in light of the fact that the dynamic power prerequisite for working in this mode is insignificant. Accordingly, the objective of the dc–dc converter controller is to direct the dc-connect voltage in astable design, while the inverter controller ought to react with the end goal that the ordered Qref is provided by the inverter through current control.

In list/swell remuneration mode, the UCAP-PC framework is modified to keep touchy burdens from unsettling influences on the supply-side like voltage droop or voltage swell. These unsettling influences require here and now vitality stockpiling, and in this mode, the dc–dc converter controller can be modified to work in lattice bolster mode. Subsequently, the objective of the dc–dc converter controller is to manage the dc-interface voltage in a steady design amid both hang/swell occasions. It is too required that the dc–dc converter have the capacity to release and meet the dynamic power necessities amid a voltage list and to be capable assimilate dynamic power in a steady form amid a voltage swell occasion.

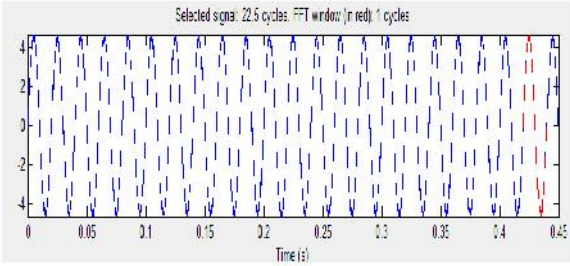

Ig-3 FFT ANALYSIS: (TOTAL HARMONIC DISTORTION)

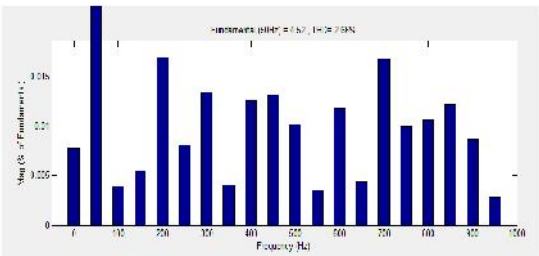

Fig-4 FFT ANALYSIS USING FUZZY CONTROLLER:

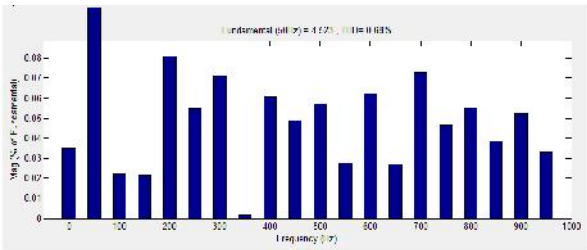

Fig,5 simulation diagram

V.CONCLUSION

In this venture, the idea of coordinating UCAP-based rechargeable vitality stockpiling to a power conditioner framework to enhance the power nature of the dispersion matrix is displayed. With this coordination, the DVR segment of the power conditioner will have the capacity to autonomously remunerate voltage hangs and swells and the APF bit of the power conditioner will have the capacity to give dynamic/receptive power bolster and sustainable discontinuity smoothing to the dispersion network. UCAP coordination through a bidirectional dc–dc converter at the dc-connection of the power conditioner is proposed. The control technique of the arrangement inverter (DVR) depends on inphase remuneration and the control methodology of the shunt inverter (APF) depends on id − iq strategy. Plans of real segments in the power phase of the bidirectional dc–dc converter are talked about. Normal current mode control is utilized to manage the yield voltage of the dc–dc converter because of its intrinsically stable trademark. A more elevated amount coordinated controller that takes choices in view of the framework parameters gives contributions to the inverters and dc–dc converter controllers to complete their control activities. The aggregate consonant bending was diminished when fuzzy controller supplanted by PI controller.The recreation of the incorporated UCAP-PC framework which comprises of the UCAP, bidirectional dc–dc converter, and the arrangement and shunt inverters is completed utilizing MATLAB/SIMULINK. The reenactment of the UCAP-PC coordinated framework is introduced and the capacity to give transitory voltage droop pay and dynamic/responsive power bolster and inexhaustible discontinuity smoothing to the dissemination network is tried. Comes about because of reenactment and examination concur well with each other in this way confirming the ideas presented in this paper. Comparable UCAPbased vitality stockpiles can be sent later on in a microgrid or a low-voltage dissemination lattice to react to element changes in the voltage profiles and power profiles on the circulation framework.

REFERENCES:

[1] Deepak Somayajula, *Student Member, IEEE*, and Mariesa L. Crow, *Fellow, IEEE,"* An Ultracapacitor Integrated Power Conditioner for Intermittency Smoothing and Improving Power Quality of Distribution Grid" , IEEE TRANSACTIONS ON SUSTAINABLE ENERGY, VOL. 5, NO. 4, OCTOBER 2014

[2] N. H. Woodley, L. Morgan, and A. Sundaram, "Experience with an inverter-based dynamic voltage restorer," *IEEE Trans. Power Del.*, vol. 14, no. 3, pp. 1181–1186, Jul. 1999.

[3] J. G. Nielsen, M. Newman, H. Nielsen, and F. Blaabjerg, "Control and testing of a dynamic voltage restorer (DVR) at medium voltage level," *IEEE Trans. Power Electron.*, vol. 19, no. 3, pp. 806–813, May 2004.

[4] V. Soares, P. Verdelho, and G. D. Marques, "An instantaneous active and reactive current component method for active filters," *IEEE Trans. Power Electron.*, vol. 15, no. 4, pp. 660–669, Jul. 2000.

[5] H. Akagi, E. H. Watanabe, and M. Aredes, *Instantaneous Reactive Power Theory and Applications*

to Power Conditioning, 1st ed. Hoboken, NJ, USA: Wiley/IEEE Press, 2007.

[6] K. Sahay and B. Dwivedi, "Supercapacitors energy storage system for power quality improvement: An overview," *J. Energy Sources*, vol. 10, no. 10, pp. 1–8, 2009.

[7] B. M. Han and B. Bae, "Unified power quality conditioner with super-capacitor for energy storage," *Eur. Trans. Elect. Power*, vol. 18, pp. 327–343, Apr. 2007.

[8] P. F. Ribeiro, B. K. Johnson, M. L. Crow, A. Arsoy, and Y. Liu, "Energy storage systems for advanced power applications," *Proc. IEEE*, vol. 89, no. 12, pp. 1744–1756, Dec. 2001.

[9] A. B. Arsoy, Y. Liu, P. F. Ribeiro, and F. Wang, "StatCom-SMES," *IEEE Ind. Appl. Mag.*, vol. 9, no. 2, pp. 21–28, Mar. 2003.

[10] J. Rittershausen and M. McDonagh, *Moving Energy Storage from Concept to Reality: Southern California Edison's Approach to Evaluating Energy Storage* [Online]. Available: http://www.edison.com/content/ dam/ eix/documents/innovation/smart-grids/Energy-Storage-Concept-to- Reality-Edison.pdf, accessed on 15 Jul., 2014.

AUTHOURS:

P NARESH currently working as a Asst. Professor, in Department of EEE, Raghu Engineering College, Vishakapatnam India. His interested areas are power quality and control, non renewable energy sources.

Sai Ganesh pursuing B.TECH in Raghu Engg.college ,vishakapatnam. His interested areas are power systems and power electronics.

B V Varshini pursuing her B.TECH in Raghu Engg.college ,vishakapatnam. Her interested areas are power systems and electrical and electronic measurements.

K Nishitha pursuing her B.TECH in Raghu Engg.college ,vishakapatnam. Her interested areas are power electronics and control systems.

Ekram Quershi pursuing his B.TECH in Raghu Engg.college ,vishakapatnam. His interested areas are power electronics and electrical machines.