International Journal of Science Engineering and Advance Technology

Reliability of Chandrapur-Padghe HVDC Line (Chapad) ±500kv HVDC Link

Ravindra.M.Gimonkar.
r.gimonkar@rediffmail.com

ABSTRACT-

This paper presents an over view of the present status of the reliability model of HVDC link in between CHANDRAPUR & PADGE terminal stations. It is well known fact that it is well-known fact that major generating stations in Maharashtra are located in its Eastern region; where as its major load-centers are located in the Western region. Now because of the increase of the power it crises many major TPPs (Tiroda) with total generation capacity (5000 MW) are coming up in Eastern region of Maharashtra i.e. Vidarbha. For this I have selected the HVDC link in between above 2 terminal station and proved the reliability of this HVDC system in more than 97%.

Key words- HVDC link, padge, Vidarbha, power crisis.

INTRODUCTION:-

Objective of the paper Reliability of 500 kv chapd_padghe hvdc. The objective of this paper is to study the impacts of HVDC link on the transmission system reliability. The use of HVDC lines in the transmission system will affect the system reliability. The HVDC will have different impacts on the transmission system operational state.

For instance, the location of the HVDC in the transmission system should be carefully chosen, the control system of the HVDC stations is one of the most important factor to obtain the HVDC efficiently working in the system. In order to assess the impacts of HVDC lines on the transmission system reliability, a qualitative study will be carried out by referring to the relevant materials in the field.

The qualitative study will evaluate the impacts of HVDC lines on the operational state of any transmission system.

Before Evaluation the system results ,it is worth discussing how the reliability data is going to be assigned to the HVDC components. The availability of the HVDC line is associated to the availability of converter transformers at the terminal stations as well as the DC cable. In other word, the HVDC line will fail if one of the three components fails. For sake of simplicity and to reduce the number of simulated states, the failure rate and repair time of the HVDC line will be calculated as the equivalent failure rate and repair time of three series connected components. Before analyzing these three components the standard constructional details and operational function of,

1. Converter transformer.
2. Thyristor valve
3. Smoothing reactor
4. A.C/ D.C filters.

Converter transformer

- The HVDC converter transformer is a very important component in a HVDC transmission system. In addition to its normal application to provide transfer of power between two voltage levels, it serves a number of additional functions like galvanic separation between the AC and DC systems. A fairly large tapping range permits optimum operation also for a large variation in load without loss of efficiency.
- The HVDC converter transformer can be built as three-phase units or as single-phase units depending on voltage and power rating. When built as three-phase transformers there is generally one unit with the valve winding arranged for star connection and the other unit for delta connection. In single-phase design the two valve windings are generally built on the same transformer unit.
- Converter transformer will connect the 400Kv station to the AC/DC converter by transforming the

voltage to such a value that the voltage of such pole of the DC line becomes 500Kv.

Thyristor valve

Thyristor valve is the heart of DC terminal. These are power electronic equipment with high voltage and current rating. Each pole will be made out of three quadruple valves comprising of thyristor electronics modules assembled in series to get adequate voltage. These valves will be cooled with de-ionized water.

It shows the three quadruple valves suspended from the ceiling. The valves are water cooled with de-ionized water and the cooling pipes can be seen it the valves and on the floor.

Smoothing reactor

It is designed for the limitation of over current phenomenon during inverter voltage collapse for smoothing DC current for resonance phenomenon and other conditions. It shall with stand
the electrical and mechanical stresses resulting from harmonics and surge currents.

The value of inductance of reactor is decided to avoid the risk for resonance with the DC line. Construnctionally it will be oil filled reactor.
This is one_reactor per pole in Chandrapur converting i.e. master station.

A.C filters.

At normal operation, a converter consumes reactive power in an amount that corresponds to approximately 50 % of the transmitted active power. The least costly way to generate reactive power is in shunt connected capacitor banks.

Some of these capacitor banks can then be combined with reactors and resistor to form filters providing low impedance paths for the harmonics in order to limit them from entering into the connected AC network.

D.C FILTER

The smoothing reactor, which is installed also for other reasons, is an important element in the filtering of D.C. Side harmonics. For overhead line transmissions, it is normally necessary to install additional filter circuits between the pole bus (outside the smoothing reactor) and the
neutral bus. Capacitors or filter circuits may also have to be installed between the neutral bus and ground. The filter types used on the D.C. side are essentially the same as those used on the a.c. side, i.e. series resonance filters and high pass filters.

Modes of Operation:

1.Monopole and earth return

In a common configuration, called monopole, one of the terminals of the rectifier is connected to earth ground. The other terminal, at a potential high above, or below, ground, is connected to a transmission line. The earthed terminal may or may not be connected to the corresponding connection at the inverting station by means of a second conductor.

If no metallic conductor is installed, current flows in the earth between the earth electrodes at the two stations.

Bipolar Mode

In bipolar transmission a pair of conductors is used, each at a high potential with respect to ground, in opposite polarity. Since these conductors must be insulated for the full voltage, transmission line cost is higher than a monopole with a return conductor.

THE RELIABILITY MODEL OF THE HVDC LINK

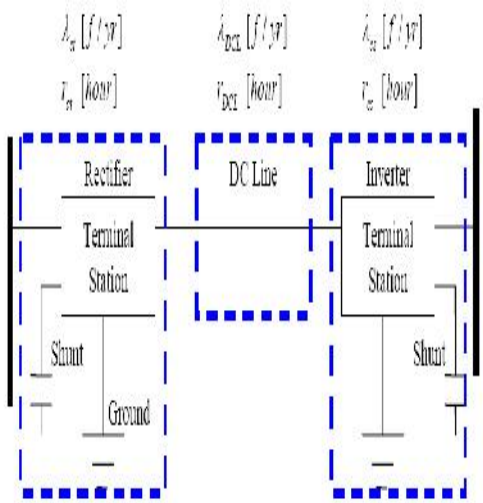

CONCLUSION:-

Study of ±500 KV bipolar high voltage direct current transmission between Chandrapur & Padghe was carried out.

This HVDC project was commissioned by the year 1997-98.The line was operated as monopolar after commission of the pole one by Oct-1997. at an reduced capacity of 750 MW.

As HVDC technology has Reached a level of maturity and is contributing to the improved performance of the AC system.

Reliability of present HVDC system (CHAPAD) is more than 97%. AND MOST IMPORTANT beneficial feature of HVDC system is VOLTAGE STABILITY IN EHVAC SYSTEM IS MAINTAINED.

REFERENCES:-

[1] I. Vancers ,D.J. Christofersen , A. Leirbukt ,M.G. Benntt "Survey Of the Reliability Of HVDC Systems Throught The World During 2003 – 2004" 21, rue d'Artois, F-75008 Paris B4-202 CIGRE 2006 http : //www.cigre.org

2] R. Leelaruji, J. Setréus, Graduate Student Member, IEEE,G. Olguin, Member, IEEE, L. Bertling, Member, IEEE Availability Assessment of the HVDC Converter Transformer System" Availability Assessment of the HVDC Converter Transformer System"Swedish Centre of Excellence in Electric Power Engineering (EKC2). R. Leelaruji, J. Setréus and L. Bertling are with the School of Electrical Engineering, Royal Institute of Technology, KTH, Stockholm, Sweden.

3] Gunnar Asplund, Urban Åström, and Dong Wu ABB Power Technologies, SE-771 80 Ludvika, Sweden;" Advantage of HVDC transmission at 800 kV" Paper submitted to 14th ISH as Keynote Lecture, Beijing, China, August 25-28, 2005

Prof. Ravindra M.Gimonkar.

Associate Professor in YCCE, Nagpur. M-Tech (IPS), Two papers are published in IJ and one paper is published in IC while Two papers are published in National Conferences.