International Journal of Science Engineering and Advance Technology

Power Maximization of a Photo Voltaic System Using LDRS

E. Ammanna Sastry, M. Satish, A.Satish
B.Tech Students, Department of EEE
Pragati Engineering College, Surampalem, AP
sastry0223@gmail.com, satishmarni99@gmail.com, satishkumar.achanta@gmail.com

ABSTRACT: In this we have proposed a photovoltaic system connected to the grid (220V/50Hz). The electric system is composed by a charge controller with the DC-DC boost converter is used along the automatic tracking system for further enhancing output power under variable isolation conditions and protecting the battery from being overcharged and over discharged condition. The Boost converter is used to overcome the lower output voltage of solar panel for not fulfilling the minimum charging voltage requirement of the battery thus more power extraction is possible from the solar panel to battery. The system includes a photovoltaic array, three LDRs sensors and a Dc/Ac converter. A maximum-power-point-tracking technique is used to operate in the optimum power condition. The Dc/Ac converter allows the adaptation of the PV system to the grid. The hysteresis technique is used to generate the output current waveform. All the command algorithms are implemented in a microchip microcontroller.

INTRODUCTION

Energy is the most basic and essential of all resources .All the energy we use on Earth comes from fission or fusion of atomic nuclei or from energy store in the Earth. The problem with both fission and fusion is that, they have dangerous radioactivity and side effect. Therefore, most of the generation of energy in our modern industrialized society is strongly depending on very limited non-renewable resources such as petroleum. As the demand for electrical energy is ever increasing and the generation is not up to the mark. With the exhaustible nature of coal, diesel and other conventional sources as well as the pollution problems, the best alternative is the use of renewable energy sources. Renewable energy is derived from natural processes that are replenished constantly. In its various forms, it derives directly from the sun, or from heat generated deep within the earth. Included in the definition is electricity and heat generated from solar, wind, ocean, hydropower, biomass, geothermal resources, and biofuels and hydrogen derived from renewable resources. Renewable energy is generally defined as energy that comes from resources which are naturally replenished on a human timescale such as sunlight, wind, rain, tides, waves and geothermal heat. Renewable energy resources exist over wide geographical areas, in contrast to other energy sources, which are concentrated in a limited number of countries. Most of the renewable energy comes either directly or indirectly from the sun. Sunlight **Solar power** is the conversion of sunlight into electricity, either directly using photo-voltaics (PV), or indirectly using concentrated solar power (CSP). Concentrated solar power systems use lenses or mirrors and tracking systems to focus a large area of sunlight into a small beam..

In the 1980s, photo-voltaics became a popular power source for consumer electronic devices, including calculators, watches, radios, lanterns and other small battery-charging applications. Following the energy crises of the 1970s, significant efforts also began to develop PV power systems for residential and commercial uses, both for stand-alone, remote power as well as for utility-connected applications. During the same period, international applications for PV systems to power rural health clinics, refrigeration, water pumping, telecommunications, and off-grid households increased dramatically, and remain a major portion of the present world market for PV products. Today, the industry's production of PV modules is growing at approximately 25 percent annually, and major programs in the U.S., Japan and Europe are rapidly accelerating the implementation of PV systems on buildings and interconnection to utility networks.

WORKING OF PHOTO VOLTAIC SYSTEM

The most effective, reliable and harmless energy source is probably solar energy. Solar energy can be harvested by the use of photovoltaic (PV) array. But, there are still some drawbacks as follow: the install cost of solar panels is high, and the conversion efficiency is still lower. The output power of the PV array varies depending on the insolation level. PV systems are like any other electrical power generating systems, just the equipment used is different than that used for conventional electromechanical generating systems. However, the principles of operation and interfacing with other electrical systems remain the same, and are guided by a well-established body of electrical codes and standards. Although a PV array produces power when exposed to sunlight, a number of other components are required to properly conduct, control, convert, distribute, and store the energy produced by the array. Depending on the functional and operational requirements of the system, the specific components required may include major components such as a DC-AC power inverter, battery bank, system and battery controller, auxiliary energy sources and sometimes the specified electrical load (appliances). In addition, an assortment of balance other power processing equipment. Figure 3 show a basic diagram of a photovoltaic system and the relationship of individual components. Batteries are often used in PV systems for the purpose of storing energy produced by the PV array during the day, and to supply it to electrical loads as needed (during the night and periods of cloudy weather). Other reasons batteries are used in PV systems are to operate the PV array near its maximum power point, to power electrical loads at stable voltages, and to supply surge currents to electrical loads and inverters. In most cases, a battery charge controller is used in these systems to protect the battery from overcharge and over discharge.

MAXIMUM POWER POINT TRACKING

Panel tracking - this is where the panels are on a mount that follows the sun. The most common are the Zomeworks and Wattsun. These optimize output by following the sun across the sky for maximum sunlight. These typically give you about a 15% increase in winter and up to a 35% increase in summer. This is just the opposite of the seasonal variation for MPPT controllers. Since panel temperatures are much lower in winter, they put out more power. And winter is usually when you need the most power from your solar panels due to shorter days. Maximum Power Point Tracking is electronic tracking - usually digital. The charge controller looks at the output of the panels, and compares it to the battery voltage. It then figures out what is the best power that the panel can put out to charge the battery. It takes this and converts it to best voltage to get maximum AMPS into the battery. (Remember, it is Amps into the battery that counts). Most modern MPPT's are around 93-97% efficient in the conversion. You typically get a 20 to 45% power gain in winter and 10-15% in summer. Actual gain can vary widely depending weather, temperature, battery state of charge, and other factors. Grid tie systems are becoming more popular as the price of solar drops and electric rates go up. There are several brands of grid-tie only (that is, no battery) inverters available. All of these have built in MPPT. Efficiency is around 94% to 97% for the MPPT conversion on those.

Here is where the optimization, or maximum power point tracking comes in. Assume your battery is low, at 12 volts. A MPPT takes that 17.6 volts at 7.4 amps and converts it down, so that what the battery gets is now 10.8 amps at 12 volts, for 100% power conversion you would get around 11.3 amps at 11.5 volts, but you have to feed the battery a higher voltage to force the amps in. And this is a simplified explanation - in actual fact the output of the MPPT charge controller might vary continually to adjust for getting the maximum amps into the battery.

The Power point tracker is a high frequency DC to DC converter. They take the DC input from the solar panels, change it to high frequency AC, and convert it back down to a different DC voltage and current to exactly match the panels to the batteries. MPPT's operate at very high audio frequencies, usually in the 20-80 kHz range. The advantage of high frequency circuits is that they can be designed with very high efficiency transformers and small components. The design of high frequency circuits can be very tricky because the problems with portions of the circuit "broadcasting" just like a radio transmitter and causing radio and TV interference. Noise isolation and suppression becomes very important.

The power point tracker (and all DC to DC converters) operates by taking the DC input current, changing it to AC, running through a transformer (usually a toroid, a doughnut looking transformer), and then rectifying it back to DC, followed by the output regulator. In most DC to DC converters, this is strictly an electronic process - no real smarts are

involved except for some regulation of the output voltage. Charge controllers for solar panels need a lot more smarts as light and temperature conditions vary continuously all day long, and battery voltage changes.

There are a few non-digital (that is, linear) MPPT's charge controls around. These are much easier and cheaper to build and design than the digital ones. They do improve efficiency somewhat, but overall the efficiency can vary a lot - and we have seen a few lose their "tracking point" and actually get worse. That can happen occasionally if a cloud passed over the panel - the linear circuit searches for the next best point, but then gets too far out on the deep end to find it again when the sun comes out.

BLOCK DIAGRAM AND OPERATION

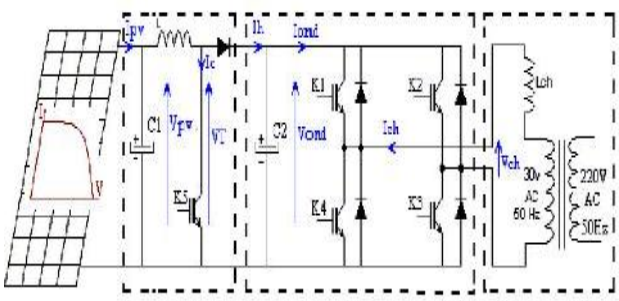

FIGURE1.BLOCK DIAGRAM OF THE SYSTEM

The main circuit can be seen in Fig.1. It consists of fiveMOSFET-transistors BUZ72l (10V,10A), five schottky diodes 8TQ080 (80V, 8A) used in parallel. Two capacitors,C1 and C2, makes the voltage source stiff and two inductors,L, and Lch to filter the output current to the low voltage AC_bus. An H-bridge can apply +Vond (K1 and K3 on), -Vond (K2 and K4 on) or zero (K1 and K2 on or K3 and K4on) at the output Vch. To force current into the AC-bus, the dc-voltage must be higher than the top value of the bus voltage in order to create a sinusoidal current.

In solar panel, the solar chargers convert light energy into DC current. They are generally portable, but can also be fixed mount. Fixed mount solar chargers are also known as solar panels. Solar panels are often connected to the electrical grid, where as portable solar chargers as used off-the-grid (i.e. cars, boats, or RVs).

Although portable solar chargers obtain energy from the sun only, they still can (depending on the technology) be used in low light (i.e. cloudy) applications. Portable solar charger are typically used for trickle charging, although some solar charger (depending on the wattage), can completely recharge batteries. Solar panels (arrays of photovoltaic cells) make use of renewable energy from the sun, and are clean.

MATHEMATICAL MODELING OF BLOCK DIAGRAM

The characteristic equation for this photovoltaic system is given by: $C_1 \frac{dV_{pv}}{dt} = I_{pv} - I_L$

The input voltage of dc-ac converter is given by: $C_2 \frac{dV_{ond}}{dt} = I_h - I_{ond}$

The current into inductor L is: $L \frac{dI_L}{dt} = V_{pv} - V_T$

The voltage across grid: $V_{ch} = L_{ch} \frac{dI_{ch}}{dt} + V_{AC} max(sin\ 2\pi ft)$

Vpv: PV voltage
Ipv: PV current
Vond: Voltage across capacitor c2
Iond: Current across capacitorc2
Ih: Current across dc chopper
VT: Voltage across K5 mosfet
Vch: Voltage across inverter
Ich: Current across inverter
Vac: Voltage at grid

LIGHT DEPENDENT RESISTORS

LDRs or Light Dependent Resistors are very useful especially in light/dark sensor circuits. Normally the resistance of an LDR is very high, sometimes as high as 10000ohms, but when they are illuminated with light resistance drops dramatically. When the light level is low the resistance of the LDR is high. This prevents current from flowing to the base of the transistors. Consequently the LED does not light. However, when light shines onto the LDR its resistance falls and current flows into the base of the first transistor and then the second transistor. The LED lights. The preset resistor can be turned up or down to increase or decrease resistance, in this way it can make the circuit more or less sensitive.

The LDR sensors provide analog data as an output. For further processing of these data, A/D

conversion is needed. Since six ADC modules contained in ATMega8 microcontroller and can work on voltage up to 5V, so it is an added advantage which reduces the cost of separate A/D converters IC. The analog output of sensors is connected to ADC pins of ATMega8 microcontroller and the A/D conversion is completed by using software program.

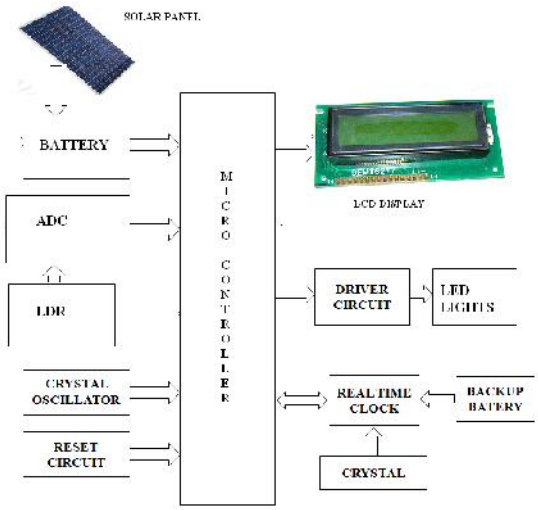

block diagram of hardware kit

DESCRIPTION OF BLOCK DIAGRAM

Crystalline Silicon Solar Panels

The creation of solar panels typically involves cutting crystalline silicon into tiny disks less than a centimeter thick. These thin, wafer-like disks are then carefully polished and treated to repair and gloss any damage from the slicing process. After polishing, dopants (materials added to alter an electrical charge in a semiconductor or photovoltaic solar cell) and metal conductors are spread across each disk. The conductors are aligned in a thin, grid-like matrix on the top of the solar panel, and are spread in a flat, thin sheet on the side facing the earth.

To protect the solar panels after processing, a thin layer of cover glass is then bonded to the top of the photovoltaic cell. After the bonding of protective glass, the nearly-finished panel is attached to a substrate by expensive, thermally conductive cement. The thermally conductive property of the cement keep the solar panel from becoming overheated; any leftover energy that the solar panel is unable to convert to electricity would otherwise overheat the unit and reduce the efficiency of the solar cells.

Despite these protective measures against the tendency of solar panels to overheat, it is vital that when installing a solar panel, additional steps should be taken to ensure the solar panel is kept cool. Elevating the solar panel above ground, to let the airflow underneath, will cool the device.

a. Amorphous Silicon Solar Panels

Amorphous silicon solar panels are a powerful that differ in output, structure and manufacture than traditional photo-voltaics which use crystalline silicon. Amorphous silicon solar cells, or A-si cells, are developed in a continuous roll-to-roll process by vapor-depositing silicon alloys in multiple layers, with each extremely thin layer specializing in the absorption of different parts of the solar spectrum. The result is record-breaking efficiency and reduced materials cost (A-si solar cells are typically thinner than their crystalline counterparts).

b. Battery:

An electrical battery is one or more electrochemical cells that convert stored chemical energy into electrical energy. The invention of the first battery (or "voltaic pile") was in 1800 by Alessandro Volta. Nowadays, batteries have become a common power source for many household and industrial applications. According to a 2005 estimate, the worldwide battery industry generates US$48 billion in sales each year, with 6% annual growth.

There are two types of batteries: primary batteries (disposable batteries), which are designed to be used once and discarded and secondary batteries (rechargeable batteries), which are designed to be recharged and used multiple times.

c. Power Supply:

The input to the circuit is applied from the regulated power supply. The a.c. input i.e., 230V from the mains supply is step down by the transformer to 12V and is fed to a rectifier. The output obtained from the rectifier is a pulsating d.c voltage. So in order to get a pure d.c voltage, the output voltage from the rectifier is fed to a filter to remove any a.c components present even after rectification. Now, this voltage is given to a voltage regulator to obtain a pure constant dc voltage.

d. Transformer:

Usually, DC voltages are required to operate various electronic equipment and these voltages are 5V, 9V or 12V. But these voltages cannot be obtained directly. Thus the a.c input available at the mains supply i.e., 230V is to be brought down to the required voltage level. This is done by a transformer. Thus, a step down transformer is employed to decrease the voltage to a required level.

e. Rectifier:

The output from the transformer is fed to the rectifier. It converts A.C. into pulsating D.C. The rectifier may be a half wave or a full wave rectifier. In this project, a bridge rectifier is used because of its merits like good stability and full wave rectification.

f. Filter:

Capacitive filter is used in this project. It removes the ripples from the output of rectifier and smoothens the D.C. Output received from this filter is constant until the mains voltage and load is maintained constant. However, if either of the two is varied, D.C. voltage received at this point changes. Therefore a regulator is applied at the output stage.

g. Voltage regulator:

As the name itself implies, it regulates the input applied to it. A voltage regulator is an electrical regulator designed to automatically maintain a constant voltage level. In this project, power supply of 5V and 12V are required. In order to obtain these voltage levels, 7805 and 7812 voltage regulators are to be used. The first number 78 represents positive supply and the numbers 05, 12 represent the required output voltage levels.

h. Real Time Clock:

The real time clock (RTC) is a widely used device that provides accurate time and date for many applications. The RTC chip present in the PC provides time components of hour, minute and second in addition to the date/calendar components of year, month and day.

The RTC chip uses an internal battery that keeps the time and date even when the power is off.

One of the most widely used RTC chips is the DS1307 from Dallas semiconductor.

i. ADC0808

The ADC0808, ADC0809 data acquisition component is a monolithic CMOS device with an 8-bit analog-to-digital converter, 8-channel multiplexer and microprocessor compatible control logic. The 8-bit A/D converter uses successive approximation as the conversion technique. The converter features a high impedance chopper stabilized comparator, a 256R voltage divider with analog switch tree and a successive approximation register. The 8-channel multiplexer can directly access any of 8-single-ended analog signals.

CONVERTER CHARACTERISTICS

The Converter

The heart of this single chip data acquisition system is its 8-bit analog-to-digital converter. The converter is designed to give fast, accurate, and repeatable conversions over a wide range of temperatures. The converter is partitioned into 3 major sections: the 256R ladder network, the successive approximation register, and the comparator. The converter's digital outputs are positive true. The 256R ladder network approach (Figure 1) was chosen over the conventional R/2R ladder because of its inherent monotonicity, which guarantees no missing digital codes. Monotonicity is particularly important in closed loop feedback control systems. A non-monotonic relationship can cause oscillations that will be catastrophic for the system. Additionally, the 256R network does not cause load variations on the reference voltage.

The A/D converter's successive approximation register (SAR) is reset on the positive edge of the start conversion (SC) pulse. The conversion is begun on the falling edge of the start conversion pulse. A conversion in process will be interrupted by receipt of a new start conversion pulse. Continuous conversion may be accomplished by tying the end of conversion (EOC) output to the SC input. If used in this mode, an external start conversion pulse should be applied after power up. End-of-conversion will go low between 0 and 8 clock pulses after the rising edge of start conversion. The most important section of the A/D converter is the comparator. It is this section which is responsible for the ultimate accuracy of the entire converter. It is also the comparator drift which has the greatest influence on the repeatability of the device. A chopper-stabilized comparator provides the most effective method of satisfying all the converters.

SIMULATION RESULTS

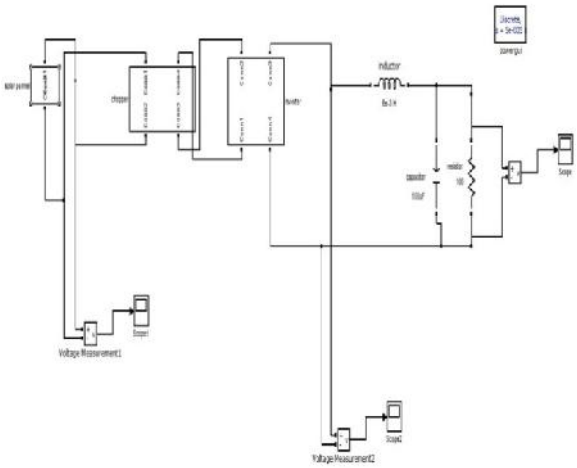

Output At Inverter:

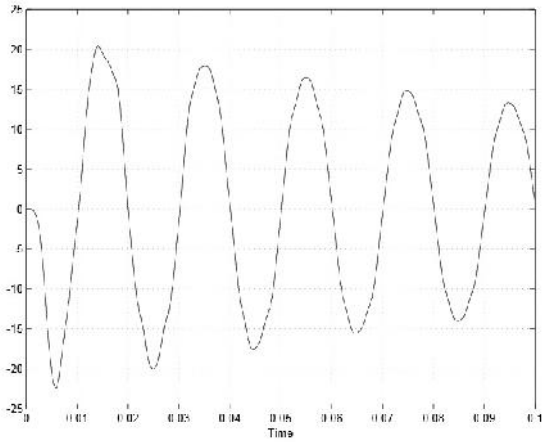

Hardware Implementation

Kit view on Morning

APPLICATIONS

- For small and large scale power generations.
- For power generation at remote places where power lines are not accessible.
- For domestic back-up power systems.
- For street lighting.

CONCLUSION

The PV array output power delivered to a load can be maximized using MPPT control systems. It consists of a power conditioner to interface the PV output to the load. In this project, the system consists of a high-efficiency, Buck type dc/dc converter, dc/ac converter and a microcontroller based unit which controls the dc/dc converter directly from the PV and the H-bridge array output power measurements. In this project, PV energy conversion system with double stage architecture has been presented. The performance of the proposed system is verified from simulated results.

FUTURE SCOPE

Mechanical tracking system has been employed in the project. Electrical tracking techniques are supposed to offer more efficiency than the mechanical tracking. So, a robust and feasible technique needs to be developed for this purpose in order to increase the power output of the photovoltaic system.

REFERENCES

[1] Fakhfakh, Mohamed Amine, Moez Ayadi, and Rafik Neji. "Implementation of photovoltaic system into microcontroller." Renewable Energies and Vehicular Technology (REVET), 2012 First International Conference on. IEEE, 2012.

[2] Bahgat, A. B. G., et al. "Maximum power point traking controller for PV systems using neural networks." Renewable Energy 30.8 (2005): 1257-1268..

[3] Ramaprabha, R., and B. L. Mathur. "Intelligent controller based maximum power point tracking for solar PV system." International Journal of Computer Applications 12.10 (2011): 37-42..

[4] Yafaoui, A., B. Wu, and R. Cheung. "Implementation of maximum power point tracking

algorithm for residential photovoltaic systems." 2nd Canadian solar buildings conference Calgary. 2007.

[5] Koutroulis, Eftichios, Kostas Kalaitzakis, and Nicholas C. Voulgaris. "Development of a microcontroller-based, photovoltaic maximum power point tracking control system." Power Electronics, IEEE Transactions on 16.1 (2001): 46-54.

[6] Hua, Chihchiang, Jongrong Lin, and Chihming Shen. "Implementation of a DSP-controlled photovoltaic system with peak power tracking." Industrial Electronics, IEEE Transactions on 45.1 (1998): 99-107.

[7] Hussein, K. H., et al. "Maximum photovoltaic power tracking: an algorithm for rapidly changing atmospheric conditions." IEE Proceedings-Generation, Transmission and Distribution 142.1 (1995): 59-64.

[8] Bose, Bimal K., Paul M. Szczesny, and Robert L. Steigerwald. "Microcomputer control of a residential photovoltaic power conditioning system." Industry Applications, IEEE Transactions on 5 (1985): 1182-1191.