ISSN 2321-6905
January-2015

IJSEAT International Journal of Science Engineering and Advance Technology

Hybrid active Power filter for power conditioning by using Space Vector Modulation controller

[1]Pathan Irufhan Khan,[2]Katari.Ramcharan
[1]P.G Student,[2]Asst.prof.Dept.of EEE,BVCEngineering College, Odalarevu, AP,India
[1]Irfankhanpathan00@gmail.com,[2]katari.ramcharan@gmail.com

Abstract: Active power filters are widely used in power systems due to their advantages to maintain power quality. In this paper, presents a control method for hybrid active power filter using Space Vector Pulse Width Modulation (SVPWM). In the proposed control method, the Active Power Filter (APF) reference voltage vector is generated instead of the reference current, and the desired APF output voltage is generated by SVPWM. Proper controller is developed to maintain power quality with APF. The entire power system block set model of the proposed scheme has been developed in MATLAB environment. The APF based on the proposed method can eliminate harmonics, compensate reactive power and balance load asymmetry. Extensive simulation results are presented with case studies.

Key Words: Active power filters, Non-linear loads, Space Vector Modulation

1.1 Introduction

The growing use of power system, non-linear and time-varying loads has led to distortion of voltage and current waveforms and increased reactive power demand in ac mains. In this process, harmonics are induced and affected on input side of the supply as well as load side. Harmonic distortion is known to be source of several problems, such as increased power losses, excessive heating in rotating machinery, and harmonic resonances in the utility, significant interference with communication circuits, flicker and audible noise, incorrect operation of sensitive loads [1, 2]. Traditionally, LC tuned passive filters have been used to absorb harmonic currents generated by nonlinear loads. Their main advantage is high reliability and low cost. However, passive filters have several drawbacks, which may cause harmonic interaction with the utility problems with the utility system, in the presence of stiff utility sharp tuning of the LC filter is required and may not meet the specified harmonic current limits [3, 4]. This provides the motivation for investigation of an active filter topology, which is practically viable, cost effective and can meet the recommended standard for high power nonlinear loads. For high-power applications, the active filters are not cost effective due to their large rating and high switching-frequency requirement of the Pulse Width Modulation (PWM) inverter.

1.2 Proposed Work

In this paper, a new controller is proposed to maintain good power quality. Among the various topologies the shunt active filter based on Voltage Source Inverter (VSI) is the most common one because of its efficiency [5]. Proposed controller is tested by Mat lab simulation. The performance of active filter depends on the adoptive control approaches. There are two major parts of an active power filter controller.

The first is that determines the reference current of APF and maintains a stable DC bus voltage. Various current detection methods, such as instantaneous reactive power theory, synchronous reference frame method, supplying current regulation and etc., are presented.

An alternative control method for shunt APF's is proposed in this project [6]. The proposed method differs from previously discussed approaches in the following ways: a) To generate APF reference voltage vector instead of reference current; b) to generate desired APF output voltage by Space Vector Pulse Width Modulation (SVPWM) [7, 8] based on generated reference voltage. Therefore, the proposed method is simple and easy to carryout. This project discussed the basic principle of this method in detail and proved its validity by simulation results.

In order to maintain good power quality, various international agencies recommended limits of harmonic current injecting into the utility according to IEEE-519 standards the limits on the magnitude of harmonic currents and harmonic voltage distortion at various frequency are specified given in Tables 2.1 and 2.2.

The amount of distortion in the voltage or current waveform is quantified by means of an index called THD, the THD in current is defined as

$$\%THD = 100\times\left(\sqrt{\sum_{n\neq 1} Isn/Is1\ 2}\right)$$

Table 2.1:

I_{sc}/I_1	h<11	≤h≤17 11	17<h<23	≤h<35 23	THD
<20	4	2	1.5	0.6	5
20-50	7	3.5	2.5	1	8
50-100	10	4.5	4	1.5	12
100-1000	12	5.5	5	2	15

Where Isc is the main short circuit current at the point of common coupling. I_1 is the maximum fundamental frequency load current.

Table 2.2
HARMONIC VOLTAGE LIMITS FOR POWER PRODUCERS:

	2.3-69 kv	69-138 kv
Max.for induced harmonics	3.0	1.5
THD	5.0	2.5

The table 2.2 lists the quality of the voltage that power producer is required to furnish a user. It is based on the voltage level at which the user is supplied.

4.3 THEORY OF SVPWM TECHNIQUE

SVPWM technique was originally developed as a vector approach to pulse–width modulation for three -phase inverters. The SVPWM method is frequently used in vector controlled applications. In vector controlled applications this technique is used for reference voltage generation when current control is exercised. It is a more sophisticated, advanced, computation intensive technique for generating sine wave that provides ahigher voltage with lower total harmonic distortion and is possibly the best among all the pulse width modulation techniques. It confines space vectors to be applied according to the region where the output voltage vector is located. Because of its superior performance characteristics, it is been finding wide spread applications in recent years. The main aim of any modulation technique is to obtain variable output voltage having a maximum fundamental component with minimum harmonics. Many PWM techniques have been developed for letting the inverters to posses various desired output characteristics to achieve the wide linear modulation range, less switching losses, lower harmonic distortion. The SVPWM technique is more popular than conventional technique because of its excellent features.

- More efficient use of DC supply voltage.
- 15% more output voltage then conventional modulation.
- Lower total Harmonic distortion
- Prevent un-necessary switching hence less commutation losses

4.4 PRINCIPLE OF SVPWM

Firstly model of a three-phase inverter is presented on the basis of space vector representation. The three-phase VSI is reproduced in Fig.3.1. $S_1$to S_6 are the six power switches that shape the output, which are controlled by the switching variables a, a', b, b', c and c'. When an upper transistor is switched on, i.e., the corresponding a', b', or c' is 0.

Voltage vectors	Switching vectors			Line to neutral voltage			Line to Line voltage		
	a	b	c	V_{an}	V_{bn}	V_{cn}	V_{ab}	V_{bc}	V_{ca}
V_0	0	0	0	0	0	0	0	0	0
V_1	1	0	0	2/3	-1/3	-1/3	1	0	-1
V_2	1	1	0	1/3	1/3	-2/3	0	1	-1
V_3	0	1	0	-1/3	2/3	-1/3	-1	1	0
V_4	0	1	1	-2/3	1/3	1/3	-1	0	1
V_5	0	0	1	-1/3	-1/3	2/3	0	-1	1
V_6	1	0	1	1/3	-2/3	1/3	1	-1	0
V_7	1	1	1	0	0	0	0	0	0

(The respective voltage should be multiplied by V_{dc})

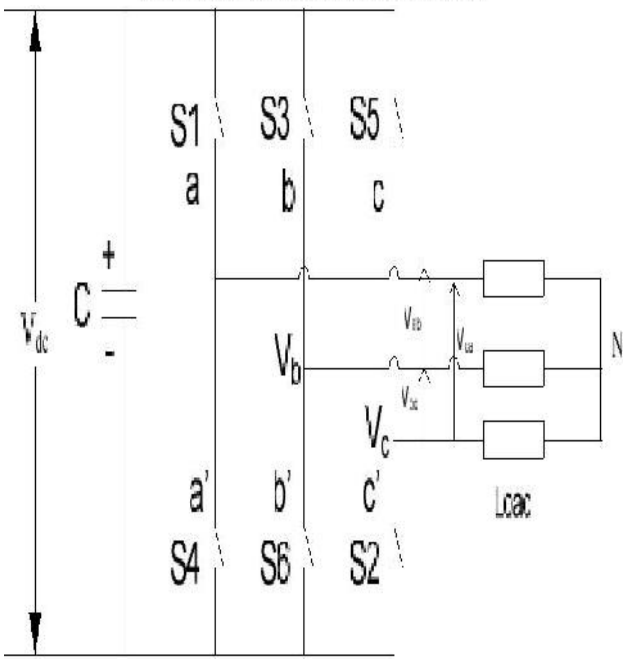

Therefore, the on and off states of the upper switches S_1, S_3, S_5 can be used to determine the output voltage.

Fig 4.6 Power circuit of a three-phase VSI(4.2)

As illustrated in Fig.4.6, there are eight possible combinations of on and off patterns for the three upper power switches. The on and off states of the lower power devices are opposite to the upper one and so are easily Table 4.1 Switching vectors, phase voltages and output line to line voltages

SVPWM refers to a special switching sequence of the upper power switches of a three-phase power inverter. It has been shown to generate less harmonic distortion in the output voltages and/or currents applied to the phases of a power system and to provide more efficient use of supply voltage compared with other modulation technique.

5.3 Compensation Principle

In the Fig.5.2, $v_{fa,1}$ and $v_{fa,h}$ denote the output fundamental and harmonic voltages of the inverter, respectively. These voltage sources are connected to a supply source (v_{sa}) in parallel via a link inductor L_f and capacitor C_f .The supply current i_{sa} is forced to be free of harmonics by appropriate voltages from the APF and the harmonic current emitted from the load is then automatically compensated.

It is known from Fig.5.2, that only fundamental component is taken into account, the voltages of the ac supply and the APF exist the following relationship in the steady state

$$\overline{V}_s = L_f \frac{d}{dt}\overline{I}_{f1} + \frac{1}{C_f}\int \overline{I}_{f1}dt + \overline{V}_{f1} \qquad (5.3)$$

where $\overline{V}_s$ is the supply voltage, $\overline{I}_{f1}$ is the fundamental current of APF, $\overline{V}_{f1}$ is the fundamental voltage of APF, and above variables are expressed in form of space vector. The APF is joined into the network through the inductor L_f and C_f. The function of these is to filter higher harmonics nearly switching frequency in the current and to link two ac voltage sources of the inverter and the network. So the required inductance and capacitance can just adopt a small value. Then the total reactance caused by inductor and capacitor for the frequency of 50Hz, and the fundamental voltages across the link inductors and capacitors are also very small, especially compared with the mains voltages. Thus the effect of the voltage of the link inductor and capacitor is neglected. So the following simplified voltage balanced equation can be obtained from equation (5.3).

$$\overline{V}_s = \overline{V}_{f1} \qquad (5.4)$$

The control object of APF is to make the supply current sinusoidal and in phase with the supply voltage. Thus the nonlinear load and the active power filter equals to a pure resistance load R_s, and the supply voltage and the supply current satisfy the following equation:

$$\overline{V}_s = R_s \cdot I_s \qquad (5.5)$$

where

determined once the states of the upper power transistors are determined. According to equations (4.1) and (4.2), the eight switching vectors, output line to neutral voltage (phase voltage), and output line-to -line voltages in terms of DC-link V_{dc} , are given in Table 4.1 and Fig.4.2 shows the eight inverter voltage vectors (V_0 to V_7).

$$\overline{I}_s = \frac{2}{3}\left(i_{sa}\, a^0 + i_{sb}\, a^1 + i_{sc}\, a^2\right) = I_{sd} + jI_{sq} = I_s \angle \overline{\ }_i.$$

Then the relationship between I_s and the supply voltage amplitude V_s is

$$V_s = R_s I_s \qquad (5.6)$$

Substituting (5.5), (5.6) into (5.4) results in

$$\overline{V}_{f1} = \frac{V_s}{I_s} \cdot \overline{I}_s \qquad (5.7)$$

Equation (5.7) describes the relationship between the output fundamental voltage of APF, the supply voltage and the supply current, which ensure that the APF operate normally. However, for making the APF normally achieving the required effect, the dc bus voltage V_{dc} has to be high enoughand stable. In the steady state, the power supplied from the supply must be equal to the real power demanded by the load, and no real power passes through the power converter for a lossless APF system. Hence, the average voltage of dc capacitor can be maintained at a constant value. If a power imbalance, such as the transient caused by load change, occurs, the dc capacitor must supply the power difference between the supply and the load, the average voltage of the dc capacitor is reduced. At this moment, the magnitude of the supply current must be enlarged to increase the real power delivered by the supply. On the contrary, the average voltage of the dc capacitor rises, and the supply current must be decreased. Therefore, the average voltage of the dc capacitor can reflect the real power flow information. In order to maintain the dc bus voltage as constant, the detected dc bus voltage is compared with a setting voltage. The compared results is fed to a PI controller, and amplitude control of the supply current I_s can be obtained by output of PI controller.

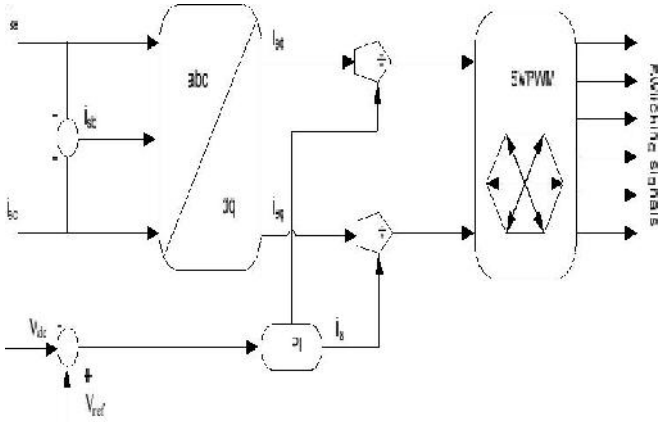

Fig.5.3 Control block diagram of proposed algorithm

The Fig.5.3 shows the block diagram of active filter controller implemented for reducing the harmonics with hybrid active filter system. In each switching cycle, the controller samples the supply currents i_{sa} ,i_{sc} and the supply current i_{sc} is calculated with the equation of -(i_{sa}+i_{sc}), as the summation of three supply current is equal to zero. These three-phase supply currents are measured and transformed into synchronous reference frame (d-q axis). The fundamental component of the supply current is transformed into dc quantities in the (d-q) axis and the supply currentamplitudeI_s generated by the PI controller with V_{dc} and V_{ref}, the reference value of the dc bus voltage. The obtained d-q axis components generate voltage command signal. By using Fourier magnitude block, voltage magnitude and angle is calculated from the obtained signal. These values are fed to the developed code and compared with the repeating sequence. Then the time durations T_1, T_2 and T_0, the on-time of V_1, V_2 and V_0 are calculated as already explained in chapter 3. The generated switching actions are applied to the APF and power balancing of the filter takes place.

6.1 INTRODUCTION

The developed control method for three-phase shunt APF is simulated in MATLAB/Simulink. Firstly, the three -phase supply currents are sensed and transformed into synchronous reference frame (d-q) axis. The fundamental component of the supply current is transformed into dc quantities in the (d-q) axis and the supply current amplitude I_s generated by the PI controller. The obtained d-q axis components generate voltage command signal. By using Fourier magnitude block, voltage magnitude and angle is

System parameters		Values of parameters
Supply system		230 V (rms), 50 Hz, three-phase supply
Balanced linear load		Z_l = 75 + j 62.83 Ω
Unbalanced	linear	Z_{la} = 75 + j 31.42 Ω, Z_{lb} = 100 + j 23.56
load		Ω,
		Z_{lc} =85+ j 31.42 Ω
Non-linear load with		R=1000Ω
resistance		
APF		C_{dc}=1000μf, Vref = 750V, C_f = 24μf,
		L_f = 30 mH

calculated from the obtained signal. These values are fed to the developed code and generated switching actions are applied to the APF. Thus, power balancing of the filter takes place. Further, the performance with different type of loads is presented.

The complete simulation model of APF with different type of loads is shown in Fig.6.1 and Fig.6.2. For an input supply voltage of 230V (rms) and switching frequency of 5kHz, the simulation results before and after power balancing are shown.

Table 6.1 parameter value

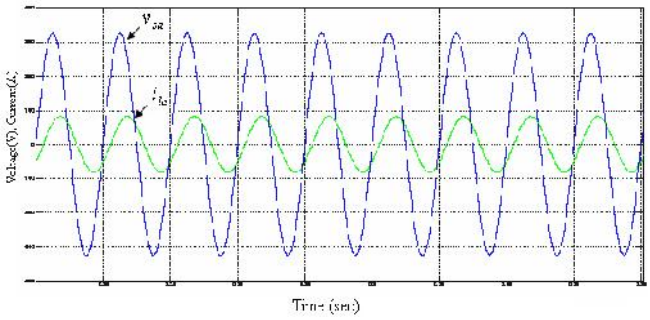

The phase-A supply voltage and load current

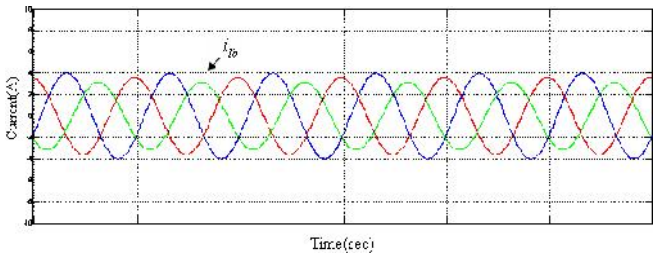

Three-phase load current

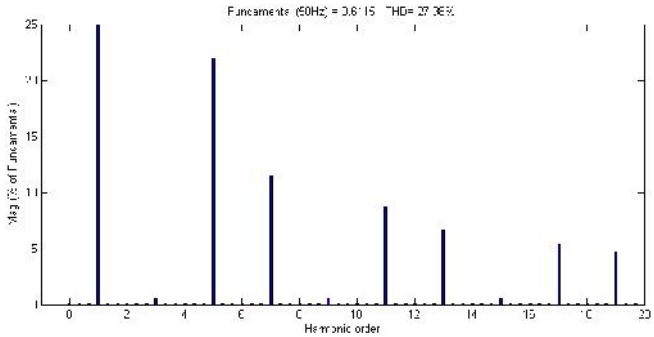

(a) The phase-A load current harmonic spectrum

6.3 CONCLUSION

From the above results the performance of balanced linear load, unbalanced linear load and non linear load with the proposed control algorithm is observed. The three-phase source voltage is made in phase with source current for balanced linear load. The three-phase source current is made equal in magnitude when an unbalanced linear load is simulated. The harmonic spectrum shows that reduction of higher order harmonics in three-phase source current when non-linear load is simulated. The hybrid filter, draw the harmonic currents coming from the nonlinear load, so the harmonics are not flowing into the grid. Though the load draws non-sinusoidal current and supply current remains sinusoidal this means that the hybrid filter is achieving a separation between load and supply, regarding the harmonic

currents.

In this project, a control methodology for the APF using SVPWM is proposed. This method requires few sensors, simple in algorithm and able to compensate harmonics and unbalanced loads. The performance of APF with this method is done in MATLAB/Simulink. The algorithm will be able to reduce the complexity of the control circuitry. The harmonic spectrum under non-linear load conditions shows that reduction of harmonics is better. Under unbalanced linear load, the magnitude of three-phase source currents are made equal and also with balanced linear load the voltage and current are made in phase with each other. The simulation study of two level inverter is carried out using SVPWM because of its better utilization of dc bus voltage more efficiently and generates less harmonic distortion in three-phase voltage source inverter. This SVPWM control methodology can be used with series APF to compensate power quality distortions.

REFERENCES:

[1] EI-Habrouk. M, Darwish. M. K, Mehta. P, "Active power filters-A review," Proc. IEE-Elec. Power Applicat., vol. 147, no. 5, Sept. 2000, pp. 403-413.

[2] Akagi, H., "New trends in active filters for power conditioning," IEEE Trans. on Industry applications, vol. 32, No. 6, Nov-Dec, 1996, pp. 1312-1322.

[3] Singh.B, Al-Haddad.K, Chandra.A, "Review of active filters for power quality improvement," IEEE Trans. Ind. Electron., vol. 46, No. 5, Oct, 1999, pp. 960-971.

[4] Ozdemir.E, Murat Kale, SuleOzdemir, "Active power filters for power compensation under non-ideal mains voltages," IEEE Trans. on Industry applications, vol.12, 20-24 Aug, 2003, pp.112-118.

[5] Dan.S.G, Benjamin.D.D, Magureanu.R, Asimionoaei.L, Teodorescu.R, Blaabjerg.F, "Control strategies of active filters in the context of power conditioning," IEEE Trans. on Ind. applications,vol.25,11-14 Sept-2005, pp.10-20

[6] Wang Jianze, PengFenghua, Wu Quitao, JiYanchao, "A novel control method for shunt active power filters using svpwm," IEEE Trans. on Industry applications, vol.1, 3-7 Oct, 2004, pp.134-139.

[7] Atif Iqbal, Lamine.A, Imtiaz.Ashraf, Mohibullah, "Matlab model of space vector pwm for three-phase voltage source inverter," universities power engineering conference, 2006, UPEC'06, proceedings of the 41st international volume 3, 6-8 Sept. 2006, pages:1096-1100.

[8] Rathnakumar.D, LakshmanaPerumal, Srinivasan.T, "A new software implementation of space vector pwm," IEEE Trans. Power Electron., vol.14,8-10 April 2005, pp.131-136.

http://www.mathworks.com